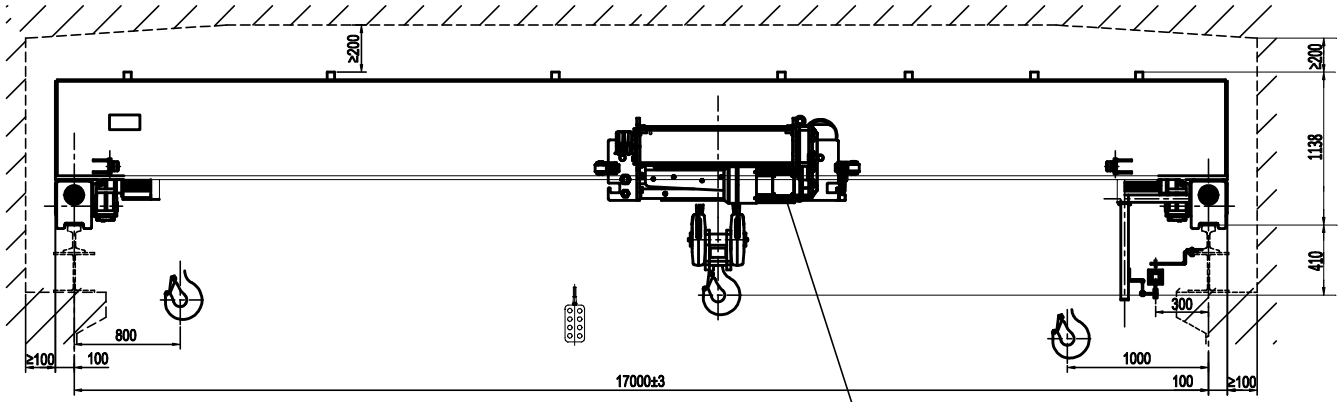

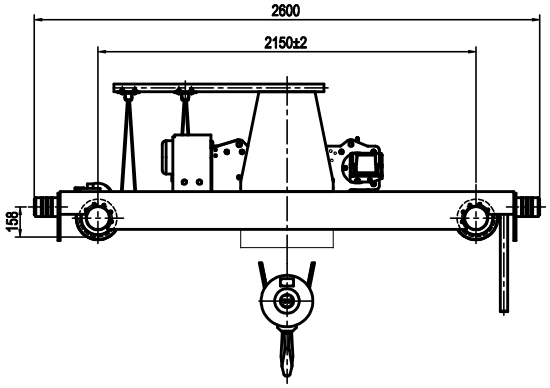

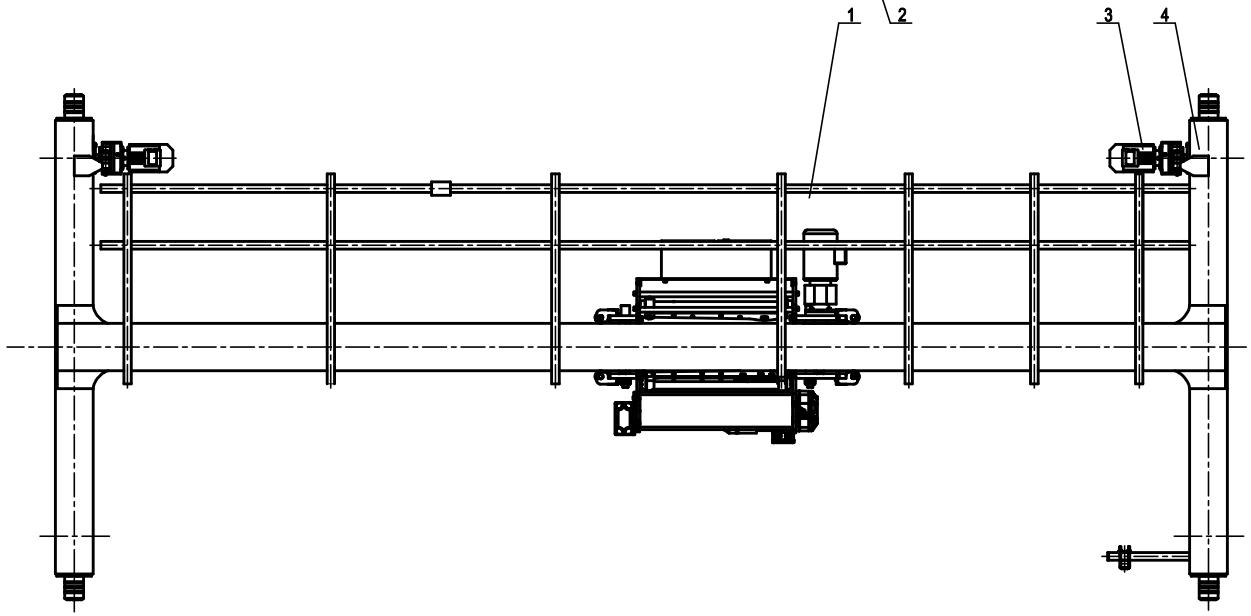

Main technical parameters

Item \ Mechanism name		Lifting	Item \ Mechanism name		Traveling	
		Main lifting			Trolley	Crane
Lifting capacity	t	5	Track gauge	m		17
Lifting speed	m/min	0.8/5	Traveling speed	m/min	2-20	3-30
Working duty		M5	Working duty		M5	M5
Max.Lifting height	m	6.59	Max.Wheel load	KN		33
Motor power		4.5KW	Motor power		0.4KW	2X0.4
Power supply		3-phase,400V, 50HZ	Type of rail			P24

The technical requirements

1. The manufacture, installation, use and so on are all should comply with the provisions of the JB/T 1306-1306.

2. Mode of operation: ground control

number	code	name	stuff	quantity	single weight (kg)	total weight (kg)	remark
4		crane span structure	part	1			
3		crane travel mechanism	part	1			
2		electric hoist	part	1			
1		electric	part	1			

mark	disposal	change file	sign	date
design		standard		
check		electric		
verify		approval		
technic		date		

HD Typle Electric single girder over-head crane

HD5t-17m A5

General drawing

HENAN DEJUN

Page one	Weight	Scale
Total	~3.7t	1:30

Reference drawing