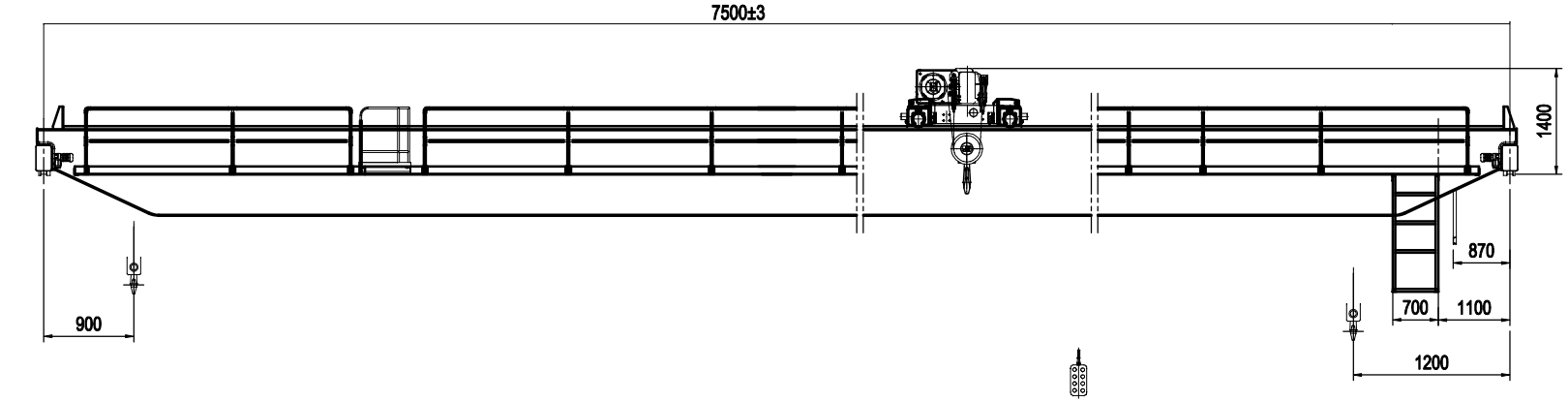

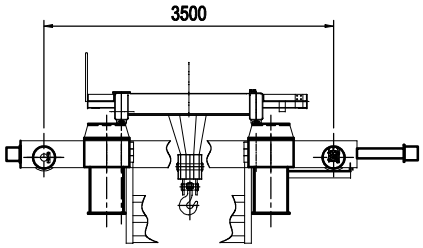

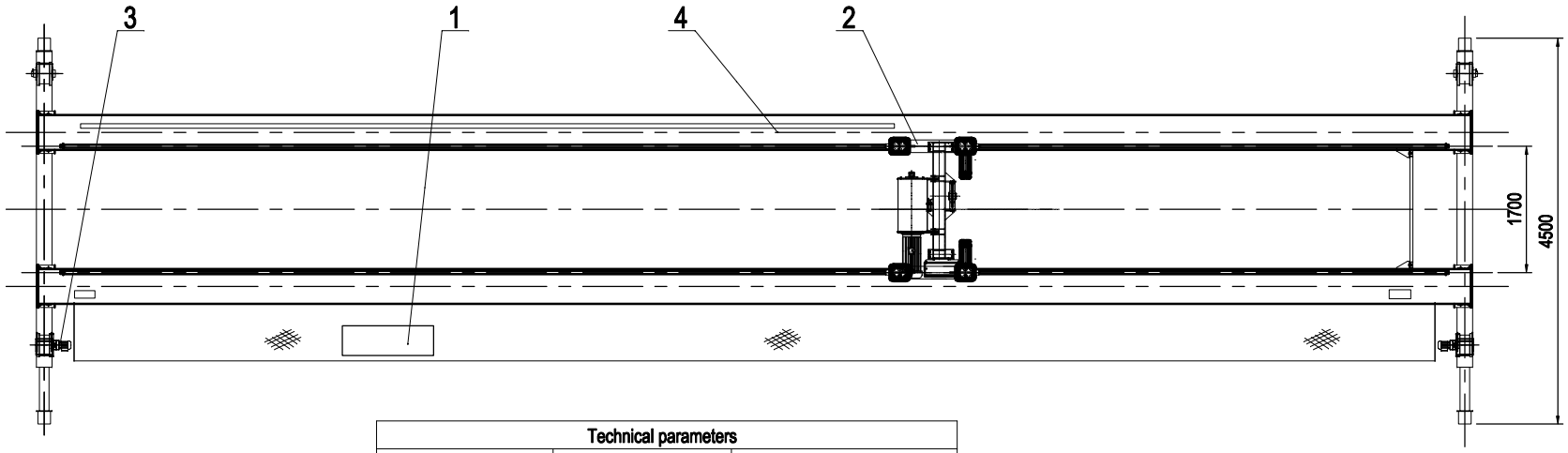

Technical parameters		
Item	Trolly Travel Mechanism	Crane Travel Mechanism
Span	1.7m	7.5m
Work system	M5	M5
Max. wheel load	—	32KN
Travel speed	2-20m/min	2-20m/min
Steel Rail Model	square steel 30×50	P24
Power supply	440V 60HZ 3P	
Motor power	2x0.4KW	2x0.75KW

Lifting Mechanism Parameter					
Lifting capacity		Working system	lifting height	lifting speed	Power
Main lifting	5t	M5	6m	0.4-4 m/min	4.5KW

Technical Requirement

1. Manufactured according to relevant regulation of GB/T 14405
2. Distance from workshop backspin to crane peak should ≥200mm
3. Control mode: ground control

number	code	name	stuff	quantity	single weight (kg)	total weight (kg)	remark
4		crane span structure	part	1			
3		crane travel mechanism	part	1			
2		trolley	part	1			
1		electric	part	1			

mark	quantity	change file	sign	date	QDX Double Girder Overhead Crane with Hook QDX 5t-7.5m A5		HENAN DEJUN
design		standard				One page	Weight	Scale
check		electric				Total	~3.7t	1:30
verify		approval			General drawing		
technic		date				Reference drawing	